TOP VIEW

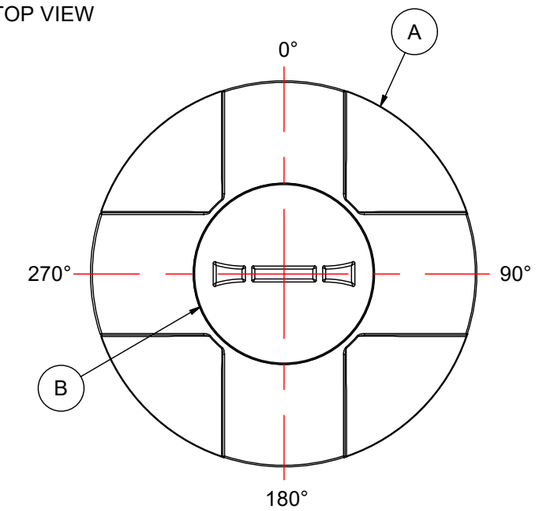

NOTES:
1. TANK IS MANUFACTURED FROM POLYETHYLENE (PE) OR CROSSLINK PE (XLPE).
2. RATED FOR STORING LIQUIDS WITH A SPECIFIC GRAVITY (DENSITY) OF 1.5SG. (1.9SG OR 2.2SG ALSO AVAILABLE)
3. ALL TANK DIMENSIONS ARE SUBJECT TO A +/-3% TOLERENCE.
4. ALL EXTERNAL PIPING AND ACCESSORIES MUST BE FULLY SUPPORTED AND FLEXIBLE TO AVOID STRESSING THE TANK.
5. FITTING GASKETS AVAILABLE IN EPDM OR VITON.
6. TANK MUST BE PROPERLY VENTED TO PREVENT PRESSURE OR VACUUM FROM DEVELOPING AS THE TANK IS FILLING OR EMPTYING.

MATERIALS LIST		
ITEMS	DESCRIPTION	NOTES
A	CT-150-CH CLOSED TOP TANK	
B	12" THREADED LID	NON-VENTED OR VENTED

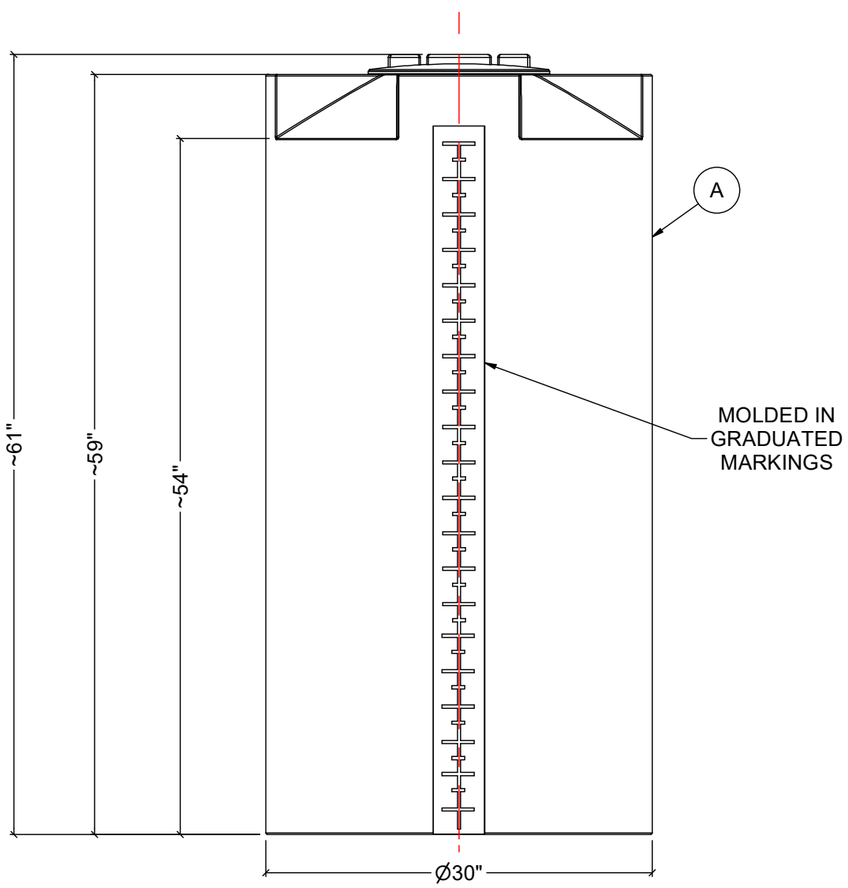

FRONT VIEW

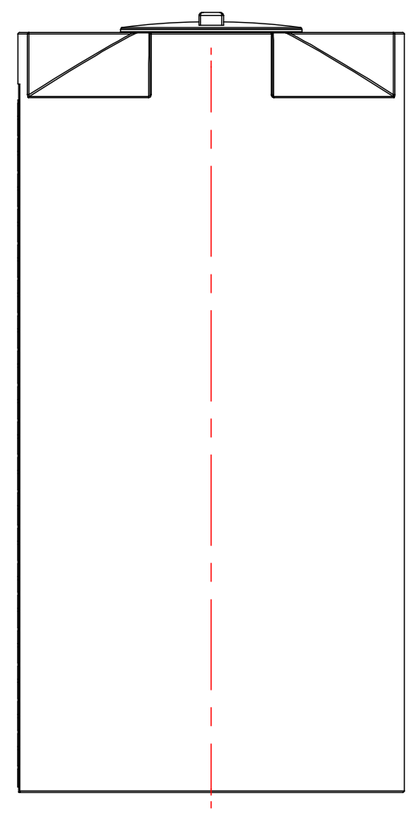

SIDE VIEW

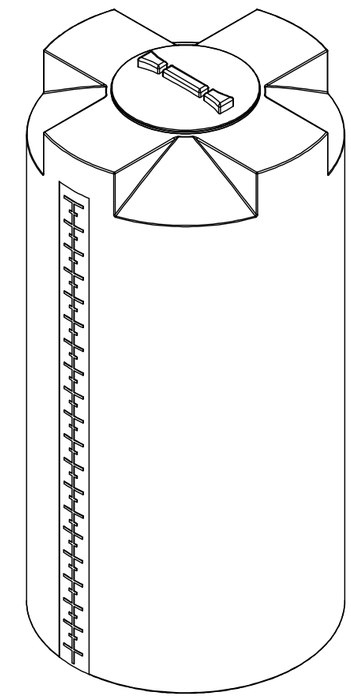

REV	DATE	DESCRIPTION	BY	APPD	REVD

REVISIONS

CUSTOMER

TITLE
150 IG / 180 USG / 680 L
CLOSED TOP TANK

ACO JOB NO:
PURCHASE ORDER NO:
PURCHASER'S EQUIP. NO:

THIS DRAWING IS THE PROPERTY OF ROTOPLAST INC. AND SHALL NOT BE COPIED OR TRANSFERRED WITHOUT THE WRITTEN CONSENT OF ROTOPLAST INC.

CONTAINER SYSTEMS
A division of Rotoplast Inc.

ENGINEERS SEAL

ACO CONTAINER SYSTEMS
DIVISION OF ROTOPLAST INC.
794 McKAY ROAD
PICKERING, ONTARIO, CANADA
TEL: 905-683-8222
WEB: ACOTAINERS.COM

DESIGNED	
DRAWN	WM
CHECKED	
APPROVED	
SCALE	N.T.S.
DATE	NOV-13-2023

DWG No CT-150-CH-2024

REV 0