TOP VIEW

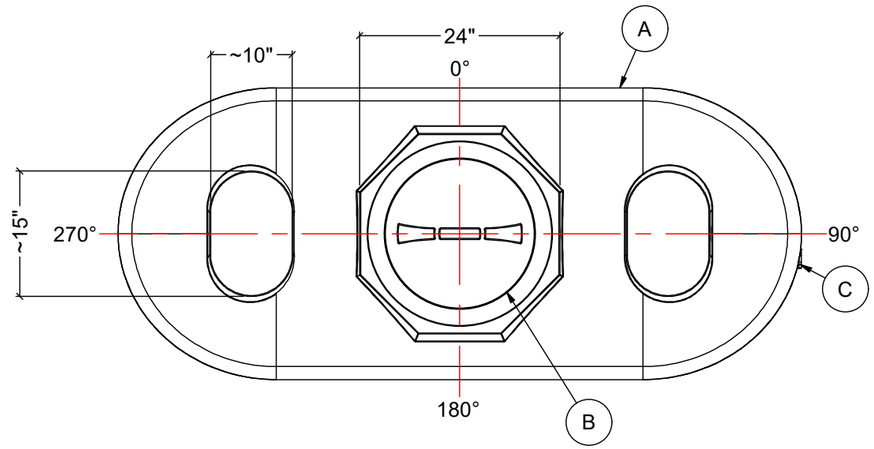

NOTES:

1. TANK IS MANUFACTURED FROM PE.
2. ALL TANK DIMENSIONS ARE SUBJECT TO A +/-3% TOLERENCE.
3. ALL EXTERNAL PIPING AND ACCESSORIES MUST BE FULLY SUPPORTED TO AVOID STRESSING THE TANK.
4. ALL FITTING GASKETS ARE EPDM.
5. FLEXIBLE COUPLINGS ARE REQUIRED FOR ALL EXTERNAL PIPING.
6. TANK MUST BE PROPERLY VENTED TO PREVENT PRESSURE OR VACUUM FROM DEVELOPING AS THE TANK IS FILLING OR EMPTYING.

MATERIALS LIST		
ITEMS	DESCRIPTION	NOTES
A	DT-2850 PE DOOR WAY TANK	
B	15" THREADED VENTED LID	
C	1-1/4" FNPT POLYPRO TANK ADAPTER	

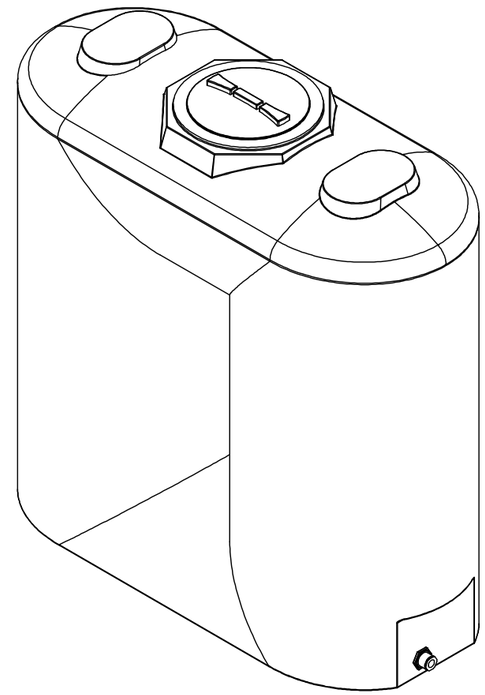

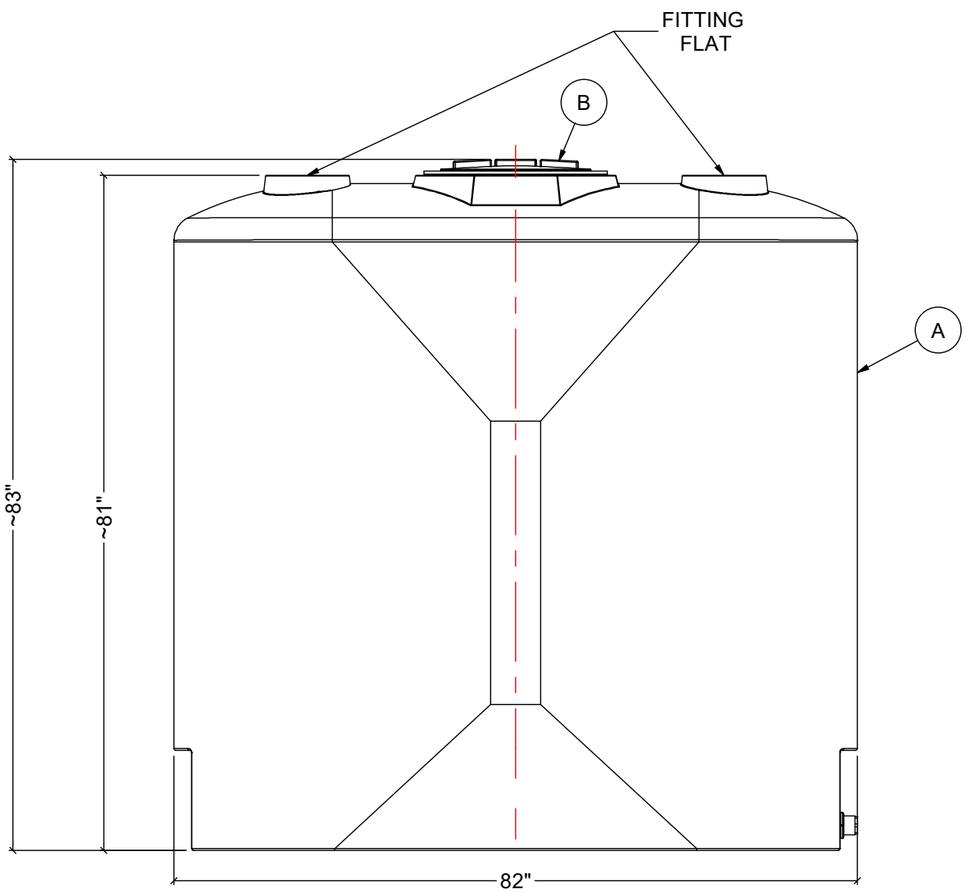

FRONT VIEW

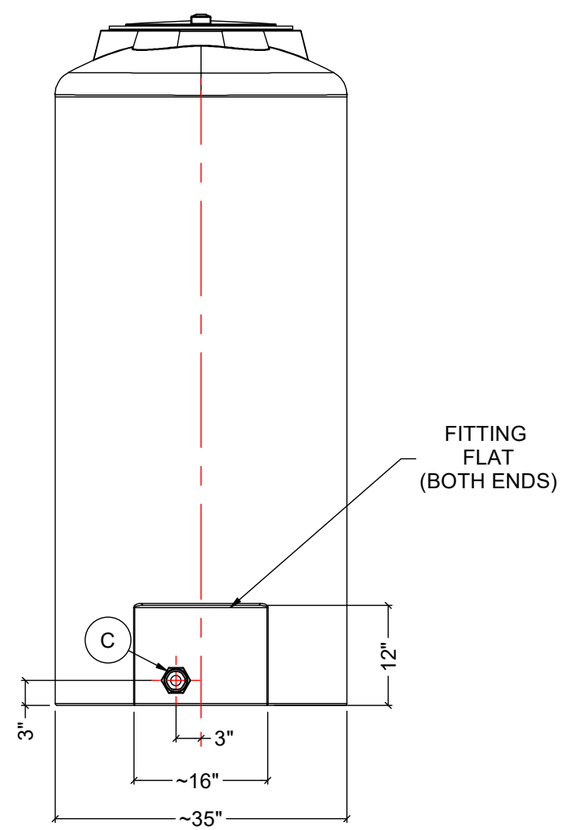

SIDE VIEW

REV	DATE	DESCRIPTION	BY	APPD	REVD

REVISIONS

CUSTOMER

TITLE

2850 L DOOR WAY TANK

ACO JOB NO:
PO#:
EQUIP. NO:

THIS DRAWING IS THE PROPERTY OF ROTOPLAST INC. AND SHALL NOT BE COPIED OR TRANSFERRED WITHOUT THE WRITTEN CONSENT OF ROTOPLAST INC.

CONTAINER SYSTEMS
A division of Rotoplast Inc.

ENGINEERS SEAL

ACO CONTAINER SYSTEMS
DIVISION OF ROTOPLAST INC.
794 McKAY ROAD
PICKERING, ONTARIO, CANADA
TEL: 905-683-8222
WEB: ACOTAINERS.COM

DESIGNED	
DRAWN	WM
CHECKED	
APPROVED	
SCALE	N.T.S.
DATE	SEP-19-2024

DWG No DW-2850

REV 0