NOTES:
1. TANK IS MANUFACTURED FROM POLYETHYLENE (HDPE)
2. RATING FOR STORING LIQUIDS WITH A SPECIFIC GRAVITY (DENSITY) OF 1.9SG.
3. ALL TANK DIMENSIONS ARE SUBJECT TO A +/-3% TOLERENCE.
4. ALL EXTERNAL PIPING AND ACCESSORIES MUST BE FULLY SUPPORTED AND FLEXIBLE TO AVOID STRESSING THE TANK.
5. FITTING GASKETS AVAILABLE IN EPDM OR VITON.
6. TANK MUST BE PROPERLY VENTED TO PREVENT PRESSURE OR VACUUM FROM DEVELOPING AS THE TANK IS FILLING OR EMPTYING.

MATERIALS LIST			
ITEMS	PART#	DESCRIPTION	NOTES
A	OT-17	17 IG / 20 USG / 77 L OPEN TOP TANK	
B	OT-17-L	REMOVABLE LID FOR OT-17	

TOP VIEW

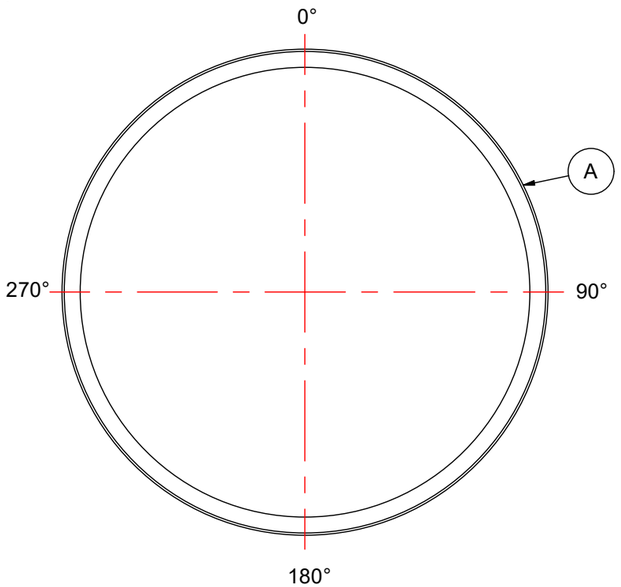

LID TOP VIEW

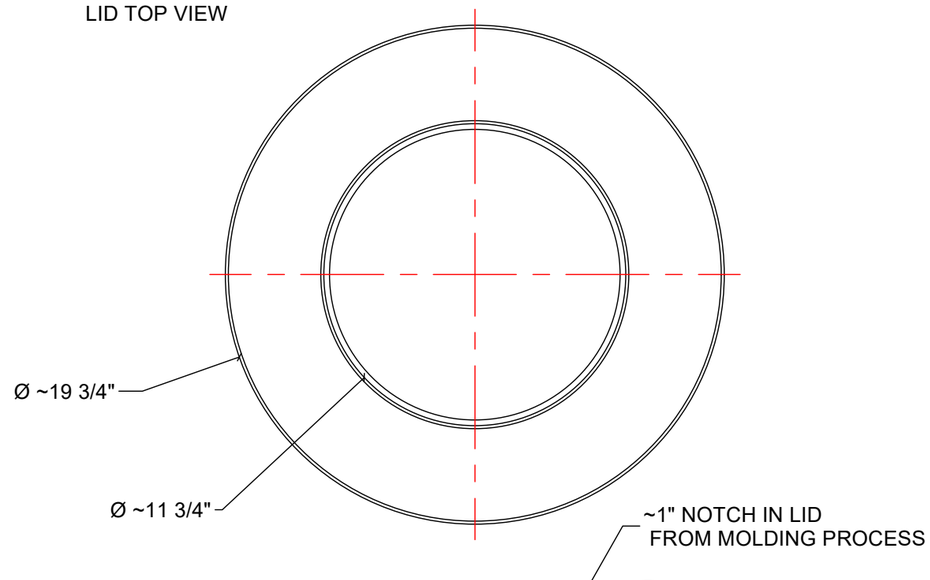

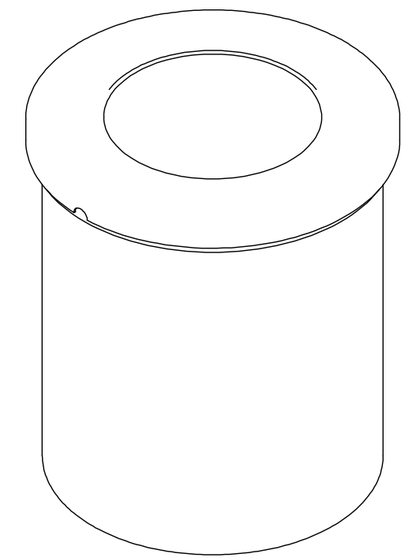

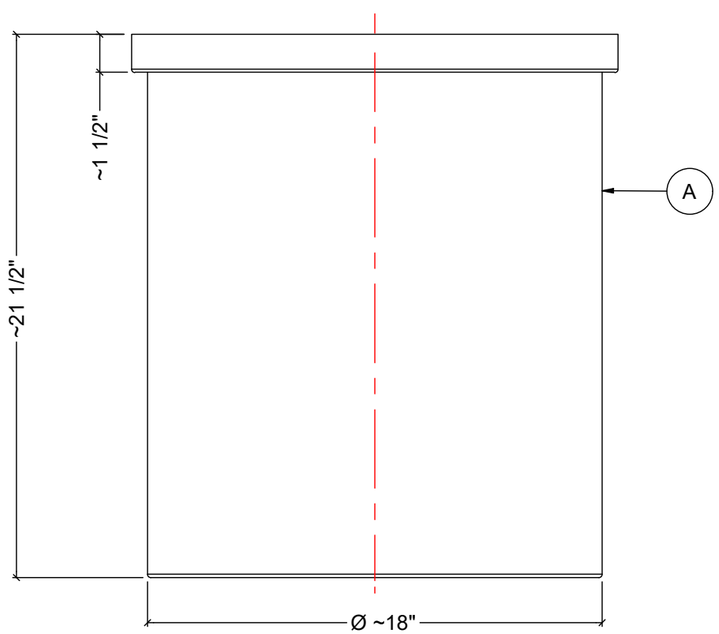

FRONT VIEW

SIDE VIEW

REV	DATE	DESCRIPTION	BY	APPD	REVD

REVISIONS

CUSTOMER

TITLE
17 IG / 20 USG / 77 L OPEN TOP TANK w/ LID

ACO JOB NO:
PO#:
EQUIP. NO:

THIS DRAWING IS THE PROPERTY OF ROTOPLAST INC. AND SHALL NOT BE COPIED OR TRANSFERRED WITHOUT THE WRITTEN CONSENT OF ROTOPLAST INC.

ACO CONTAINER SYSTEMS
A division of Rotoplast Inc.

ENGINEERS SEAL

ACO CONTAINER SYSTEMS
DIVISION OF ROTOPLAST INC.
794 McKAY ROAD
PICKERING, ONTARIO, CANADA
TEL: 905-683-8222
WEB: ACOTAINERS.COM

DESIGNED	
DRAWN	gt
CHECKED	
APPROVED	
SCALE	N.T.S.
DATE	11-23-2023

DWG No
OT-17-L-2024

REV